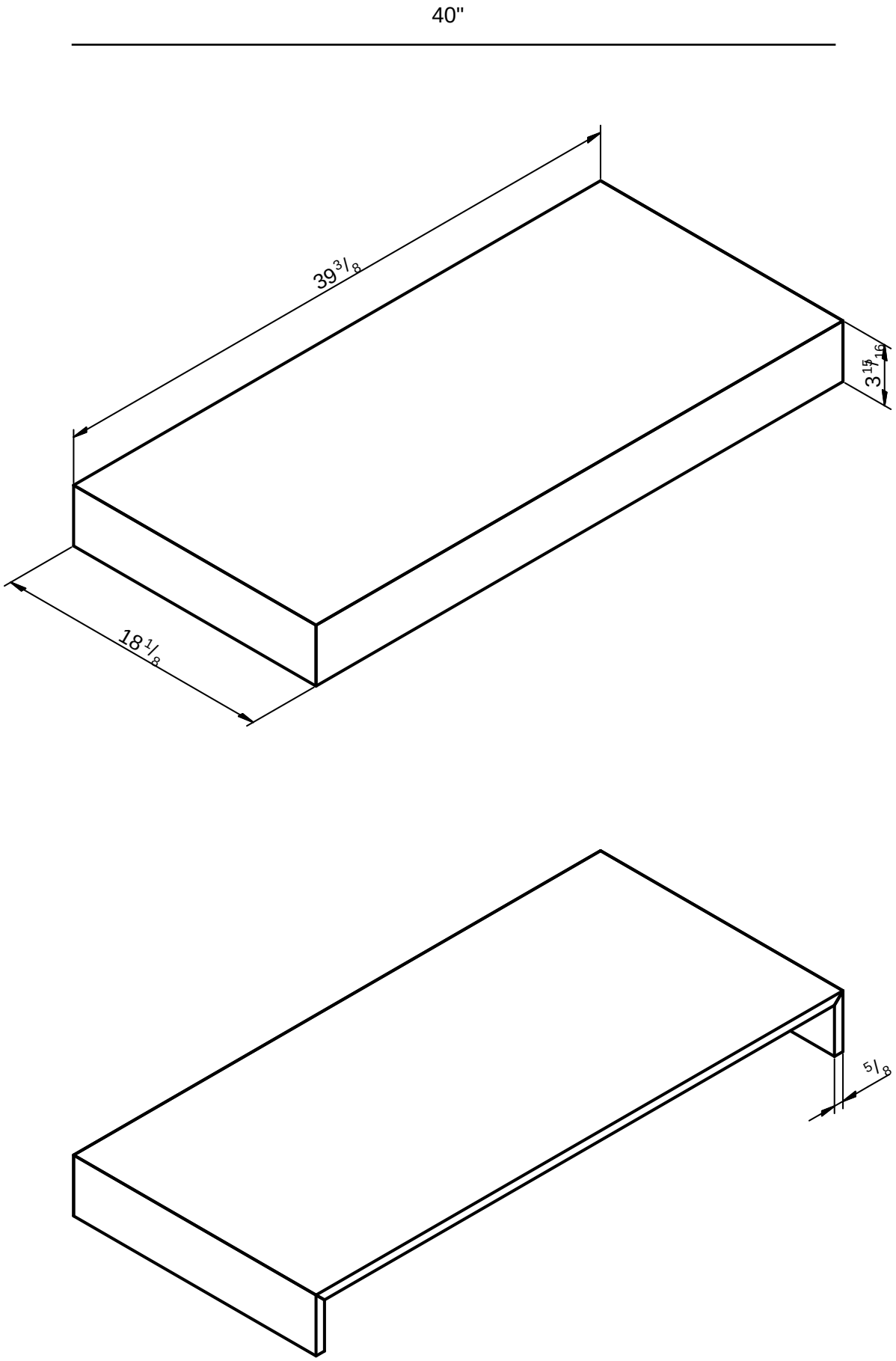
40"
39 3/8
3 15/16
18 1/8
5/8